01-10A SERIES

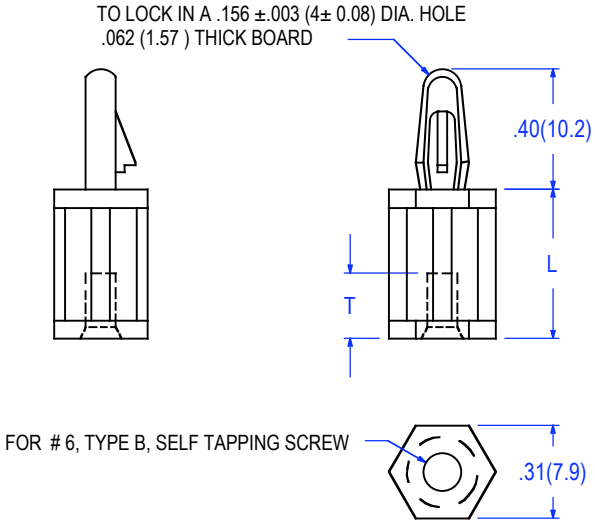

ITEM NO	L Inches ± .015	(mm) (± 0.4)	T Inches ± .015
01-10A-40	.250	(6.4)	.20 (5.2)
01-10A-60	.375	(9.5)	.31 (8)
01-10A-80	.500	(12.7)	
01-10A-100	.625	(15.9)	
01-10A-120	.750	(19)	
01-10A-140	.875	(22.2)	
01-10A-160	1.00	(25.4)	
01-10A-180	1.12	(28.6)	
01-10A-200	1.25	(31.8)	
01-10A-225	1.41	(35.7)	

PACKAGING: 1000 PCS PER BAG.

MATERIAL	NYLON 66
UL RATING	94V-2
UL FILE NO.	E41938
COLOR	NATURAL
ASTM	D 4066, PA111
RoHS COMPLIANCE	YES
TEMPERATURE RANGE (REF.)	-40 to185°F (-40 to 85°C)
MR NUMBER	12

NYLON 66, RATED UL94V-0 AVAILABLE ON REQUEST
TO ORDER ADD SUFFIX "X" TO PART NUMBER

					BY	DATE
				CUSTOMER'S OK		
				VERIFIED		
C	Corrected material table, pack size,and removed -30	11-23-9	FL	REVIEWED	F. LODI	11-23 -09
No	Revision	Date	Init	DRAWN	F. LODI	11-19-09

Title **PCB SUPPORT, SELF THREADING**

File No. 0110Aseries

ALL ELECTRONICS HARDWARE, INC.
2642 CORPORATE PARKWAY
ALGONQUIN, IL. 60102 1-800-778-7234

Issue C

11-23-09